Republic of Iraq
Ministry of Higher Education and Scientific Research

Northern Technical University

Environmental and pollution department

وزارة التعليم العالي والبحث العلمي

الجامعة التقنية الشمالية

قسم هندسة تقنيات البيئة والتلوث

حقيبة تدريبية

بعنوان: مبادئ هندسة البيئية

إعداد
م.م اسماء غازي جميل

ASMA AL WINDAWI

دليل البرنامج

- المادة الدراسية :- مبادئ الهندسة البيئية / principle of environmental engineering
- عدد الساعات :- (3) نظري.
- لغة التدريس :- الانكليزية .
- طبيعة المادة :- سنوية .
- عدد الاسابيع :- (30) اسبوع .
- الفئة المستهدفة :- طلبة المرحلة الاولى .
- اهداف المادة :- بعد اكمال دراسة المادة سيكون الطالب قادراً على :-
  1. انشاء اساس علمي هندسي لمواضيع الهندسة البيئة.
  2. فهم مبادئ عمليات الهندسة البيئة و موازنة المادة و الطاقة.
  3. فهم المشاكل البيئية.
  4. تهيئة الطالب للمراحل التالية.
- الوحدت النمطية :- (كل وحدة نمطية تمثل مفردة اسبوع دراسي واحد) .

ASMAA ALWINDAWI

فهرس المحتويات

Week No.	Items Detail
1	Introduction to Engineering Calculations
2-6	Introduction to Engineering Calculations (process and Process variables).
7-9	Process data representation and analysis
10-16	Material Balances and Separations.
17-20	Reactors for Environmental Engineering
21-25	Energy Flows and Balances.
26-30	Ideal Gas

ASMAA ALWINDAWI

Republic of Iraq
Ministry of Higher Education and Scientific Research

Northern Technical University

Environmental and pollution department

وزارة التعليم العالي والبحث العلمي

الجامعة التقنية الشمالية

قسم هندسة تقنيات البيئة والتلوث

الاسبوع الاول

(الوحدة النمطية)

Introduction to Engineering Calculations

1.1 WHAT IS ENVIRONMENTAL ENGINEERING?

Environmental engineering has a long history, although the phrase "environmental engineering" is relatively new. It is useful to review briefly that history and look at what the future holds before delving into specific examples and the nitty-gritty of concepts and calculations.

1.1.1 The Origins of Environmental Engineering

The roots of environmental engineering reach back to the beginning of civilization. Providing clean water and managing wastes became necessary whenever people congregated in organized settlements. For ancient cities, the availability of a dependable water source often meant the difference between survival and destruction, and a water supply became a defensive necessity. The builders of wells and aqueducts were the same people who were called on to build the city walls and moats, as well as the catapults and other engines of war. These men became the engineers of antiquity. It was not until the mid-1700s that engineers who built facilities for the civilian population began to distinguish themselves from the engineers primarily engaged in matters of warfare, and the term "civil engineering" was born. In the formative years of the United States, engineers were mostly self-educated or were trained at the newly formed United States Military Academy. Civil engineers—the builders of roads, bridges, buildings, and railroads—were called on to design and construct water supplies for the cities, and to provide adequate systems for the management of waterborne wastes and storm water.

1.1.2 Environmental Engineering Today

Sanitary engineers have achieved remarkable reductions in the transmission of acute disease by contaminated air or water. In the United States, the acute effects of pollution are for all intents and purposes eliminated. These acute concerns have been replaced, however, by more complex and chronic problems such as climate change; depleting aquifers; indoor air pollution; global transport of persistent, bioaccumulating and toxic chemicals; synergistic impacts of complex mixtures of human-made chemicals from household products and pharmaceuticals in wastewater effluents, rivers and streams; endocrine-disrupting chemicals; and a lack of information on the effect on human and environmental health and safety of rapidly emerging new materials, such as nanoparticles. Challenges to individual environmental media such as air and water can no longer be considered and managed within individual compartments. They must be managed at the ecosystem level to avoid shifting

1.1.3 Environmental Engineering on the Horizon

In the 21st century it is apparent that ecosystems and the natural capital on our planet are not inexhaustible. Preserving and maintaining the health, economic, and social well-being of people depends on preserving and maintaining the integrity of ecosystems and the ecosystem services they provide. The solution is not a trade-off. The solution is the well-being of the economy *and* the environment. A common goal has emerged throughout the world—the goal of sustainable development—defined by a 1987 United Nations commission in the Brundtland Report as "development that meets the needs of the present without compromising the ability of future generations to meet their own needs." Sustainable development (sometimes referred to as "sustainability") means different things to different people and communities depending on the nature of their activities and the cultural, geographic, economic, and environmental contexts in which they operate.

ASM

Republic of Iraq
Ministry of Higher Education and Scientific Research

Northern Technical University

Environmental and pollution department

وزارة التعليم العالي والبحث العلمي

الجامعة التقنية الشمالية

قسم هندسة تقنيات البيئة والتلوث

Introduction to Engineering Calculations

Chapter 1 suggests the range of problems encompassed by chemical engineering, both in traditional areas of chemical processing and in relatively new fields such as environmental science and engineering, bioengineering, and semiconductor manufacturing. Differences between the systems mentioned in the chapter—chemical manufacturing processes, genetic engineering laboratories, pollution control facilities, and the others—are obvious. In this book, we examine the similarities.

One similarity is that all of the systems described involve **processes** designed to transform raw materials into desired products. Many of the problems that arise in connection with the design of a new process or the analysis of an existing one are of a certain type: given amounts and properties of the raw materials, calculate amounts and properties of the products, or vice versa.

The object of this text is to present a systematic approach to the solution of problems of this type. This chapter presents basic techniques for expressing the values of system variables and for setting up and solving equations that relate these variables. In Chapter 3 we discuss the variables of specific concern in process analysis—temperatures, pressures, chemical compositions, and amounts or flow rates of process streams—describing how they are defined, calculated, and, in some cases, measured. Parts Two and Three of the book deal with the laws of conservation of mass and energy, which relate the inputs and outputs of manufacturing systems, power plants, and the human body. The laws of nature constitute the underlying structure of all of process design and analysis; in the same way, the techniques that we present in this chapter underlie all applications of the laws.

2.0 INSTRUCTIONAL OBJECTIVES

After completing this chapter, you should be able to do the following:

- Convert a quantity expressed in one set of units into its equivalent in any other dimensionally consistent units using conversion factor tables. [For example, convert a heat flux of 235 $kJ/(m^2 \cdot s)$ into its equivalent in $Btu/(ft^2 \cdot h)$.]
- Identify the units commonly used to express both mass and weight in SI, CGS, and American Engineering units. Calculate weights from given masses in either natural units (e.g., $kg \cdot m/s^2$ or $lb_m \cdot ft/s^2$) or defined units (N, lb_f).
- Identify the number of significant figures in a given value expressed in either decimal or scientific notation and state the precision with which the value is known based on its significant figures. Determine the correct number of significant figures in the result of a series of arithmetic operations (adding, subtracting, multiplying, and dividing).

ASMAA ALW

Republic of Iraq
Ministry of Higher Education and Scientific Research

Northern Technical University

Environmental and pollution department

وزارة التعليم العالي والبحث العلمي

الجامعة التقنية الشمالية

قسم هندسة تقنيات البيئة والتلوث

الاسبوع (6-2)
الوحدة النمطية

Introduction to Engineering Calculations (process and Process variables)

A **process** is any operation or series of operations by which a particular objective is accomplished. In this textbook, we address those operations that cause a physical or chemical change in a substance or mixture of substances. The material that enters a process is referred to as the **input** or **feed**, and that which leaves is the **output** or **product**. It is common for processes to consist of multiple steps, each of which is carried out in a **process unit**, and each process unit has associated with it a set of input and output **process streams**.

As a chemical engineer, you might be called upon to *design* or *operate* a process. **Design** includes formulation of a process flowsheet (layout) as well as specification of individual process units (such as reactors, separation equipment, heat exchangers) and associated operating variables, and **operation** involves the day-to-day running of the process. The process and all the equipment must produce product at a designated rate and with specified characteristics. Moreover, you may be responsible for maintaining the economic competitiveness of the process by identifying cost-cutting measures that reduce the use of raw materials or energy. At times the process may function poorly and you will embark on a *troubleshooting* exercise to find the problem. Market conditions may dictate a production rate greater than that which can be accommodated by the existing equipment at the current operating conditions and *debottlenecking* will be in order; sometimes the reverse happens and the production rate needs to be reduced and *turndown* becomes a concern.

The links among all of the activities and functions described in the preceding paragraph are the process streams connecting process units and forming the process flowsheet. Performance of the functions requires knowledge of the amounts, compositions, and conditions of the process streams and materials within the process units. You must be able to measure or calculate such information for existing units or specify and calculate such information for units being designed.

In this chapter we present definitions, illustrative measurement techniques, and methods of calculating variables that characterize the operation of processes and individual process units. In later chapters, we discuss how you can use the measured values of some of these variables to calculate process-related quantities that cannot be measured directly but must be known before the process can be fully designed or evaluated.

UNITS AND DIMENSIONS

A measured or counted quantity has a numerical **value** (2.47) and a **unit** (whatever there are 2.47 of). It is useful in most engineering calculations—and essential in many—to write both the value and the unit of each quantity appearing in an equation:

$$2 \text{ meters}, \quad \tfrac{1}{3} \text{ second}, \quad 4.29 \text{ kilograms}, \quad 5 \text{ gold rings}$$

A **dimension** is a property that can be measured, such as length, time, mass, or temperature, or calculated by multiplying or dividing other dimensions, such as length/time (velocity), length^3 (volume), or mass/length^3 (density). Measurable units (as opposed to countable units) are specific values of dimensions that have been defined by convention, custom, or law, such as grams for mass, seconds for time, and centimeters or feet for length.

Units can be treated like algebraic variables when quantities are added, subtracted, multiplied, or divided. *The numerical values of two quantities may be added or subtracted only if the units are the same.*

$$3 \text{ cm} - 1 \text{ cm} = 2 \text{ cm} \qquad (3x - x = 2x)$$

but

$$3 \text{ cm} - 1 \text{ mm (or 1 s)} = ? \qquad (3x - y = ?)$$

On the other hand, *numerical values and their corresponding units may always be combined by multiplication or division.*

$$3 \text{ N} \times 4 \text{ m} = 12 \text{ N·m}$$

$$\frac{5.0 \text{ km}}{2.0 \text{ h}} = 2.5 \text{ km/h}$$

$$7.0 \frac{\text{km}}{\text{h}} \times 4 \text{ h} = 28 \text{ km}$$

$$3 \text{ m} \times 4 \text{ m} = 12 \text{ m}^2$$

ASMA

MASS AND VOLUME

The **density** of a substance is the mass per unit volume of the substance (kg/m^3, g/cm^3, lb_m/ft^3, etc.) The **specific volume** of a substance is the volume occupied by a unit mass of the substance; it is the inverse of density. Densities of pure solids and liquids are essentially independent of pressure and vary relatively slightly with temperature. The temperature variation may be in either direction: the density of liquid water, for example, increases from 0.999868 g/cm^3 at 0°C to 1.00000 g/cm^3 at 3.98°C, and then decreases to 0.95838 g/cm^3 at 100°C. Densities of many pure compounds, solutions, and mixtures may be found in standard references (such as *Perry's Chemical Engineers' Handbook*,[1] pp. 2-7 through 2-47 and 2-91 through 2-120). Methods of estimating densities of gases and mixtures of liquids are given in Chapter 5 of this book.

The density of a substance can be used as a conversion factor to relate the mass and the volume of a quantity of the substance. For example, the density of carbon tetrachloride is 1.595 g/cm^3; the mass of 20.0 cm^3 of CCl_4 is therefore

$$20.0\ \text{cm}^3 \left| \frac{1.595\ \text{g}}{\text{cm}^3} \right. = 31.9\ \text{g}$$

and the volume of 6.20 lb_m of CCl_4 is

$$6.20\ \text{lb}_\text{m} \left| \frac{454\ \text{g}}{1\ \text{lb}_\text{m}} \right| \frac{1\ \text{cm}^3}{1.595\ \text{g}} = 1760\ \text{cm}^3$$

EXAMPLE 3.1-1 ***Mass, Volume, and Density***

Calculate the density of mercury in lb_m/ft^3 from a tabulated specific gravity, and calculate the volume in ft^3 occupied by 215 kg of mercury.

SOLUTION Table B. 1 lists the specific gravity of mercury at 20°C as 13.546. Therefore,

$$\rho_{Hg} = (13.546)\left(62.43\ \frac{\text{lb}_\text{m}}{\text{ft}^3}\right) = \boxed{845.7\ \frac{\text{lb}_\text{m}}{\text{ft}^3}}$$

$$V = \frac{215\ \text{kg}}{} \left| \frac{1\ \text{lb}_\text{m}}{0.454\ \text{kg}} \right| \frac{1\ \text{ft}^3}{845.7\ \text{lb}_\text{m}} = \boxed{0.560\ \text{ft}^3}$$

CONVERSION OF UNITS

A measured quantity can be expressed in terms of any units having the appropriate dimension. A particular velocity, for instance, may be expressed in ft/s, miles/h, cm/yr, or any other ratio of a length unit to a time unit. The numerical value of the velocity naturally depends on the units chosen.

The equivalence between two expressions of the same quantity may be defined in terms of a ratio:

$$\frac{1\text{ cm}}{10\text{ mm}} \quad \text{(1 centimeter per 10 millimeters)} \tag{2.2-1}$$

$$\frac{10\text{ mm}}{1\text{ cm}} \quad \text{(10 millimeters per centimeter)} \tag{2.2-2}$$

$$\left[\frac{10\text{ mm}}{1\text{ cm}}\right]^2 = \frac{100\text{ mm}^2}{1\text{ cm}^2} \tag{2.2-3}$$

Ratios of the form of Equations 2.2-1, 2.2-2, and 2.2-3 are known as **conversion factors.**

To convert a quantity expressed in terms of one unit to its equivalent in terms of another unit, multiply the given quantity by the conversion factor (new unit/old unit). For example, to convert 36 mg to its equivalent in grams, write

$$(36\text{ mg}) \times \left(\frac{1\text{ g}}{1000\text{ mg}}\right) = 0.036\text{ g} \tag{2.2-4}$$

(Note how the old units cancel, leaving the desired unit.) An alternative way to write this equation is to use a vertical line instead of the multiplication symbol:

$$\frac{36\text{ mg}\,\big|\,1\text{ g}}{\big|\,1000\text{ mg}} = 0.036\text{ g}$$

Carrying along units in calculations of this type is the best way of avoiding the common mistake of multiplying when you mean to divide and vice versa. In the given example, the result is known to be correct because milligrams cancel leaving only grams on the left side, whereas

$$\frac{36\text{ mg}\,\big|\,1000\text{ mg}}{\big|\,1\text{ g}} = 36{,}000\text{ mg}^2/\text{g}$$

SYSTEMS OF UNITS

A system of units has the following components:

1. ***Base units*** for mass, length, time, temperature, electrical current, and light intensity.
2. ***Multiple units,*** which are defined as multiples or fractions of base units such as minutes, hours, and milliseconds, all of which are defined in terms of the base unit of a second. Multiple units are defined for convenience rather than necessity: it is simply more convenient to refer to 3 yr than to 94,608,000 s.
3. ***Derived units,*** obtained in one of two ways:
   (a) By multiplying and dividing base or multiple units (cm^2, ft/min, $kg \cdot m/s^2$, etc.). Derived units of this type are referred to as **compound units.**
   (b) As defined equivalents of compound units (e.g., 1 erg $\equiv$ $(1g \cdot cm/s^2)$, 1 $lb_f \equiv 32.174$ $lb_m \cdot ft/s^2$).

The "Système Internationale d'Unités," or **SI** for short, has gained widespread acceptance in the scientific and engineering community. Two of the base SI units—the ampere for electrical current and the candela for luminous intensity—will not concern us in this book. A third, the kelvin for temperature, will be discussed later. The others are the meter (m) for length, the kilogram (kg) for mass, and the second (s) for time.

Prefixes are used in SI to indicate powers of ten. The most common of these prefixes and their abbreviations are mega (M) for 10^6 (1 megawatt = 1 MW = 10^6 watts), kilo (k) for 10^3, centi (c) for 10^{-2}, milli (m) for 10^{-3}, micro (μ) for 10^{-6}, and nano (n) for 10^{-9}. The conversion factors between, say, centimeters and meters are therefore 10^{-2} m/cm and 10^2 cm/m. The principal SI units and prefixes are summarized in Table 2.3-1.

The **CGS system** is almost identical to SI, the principal difference being that grams (g) and centimeters (cm) are used instead of kilograms and meters as the base units of mass and length. The principal units of the CGS system are shown in Table 2.3-1.

The base units of the **American engineering system** are the foot (ft) for length, the pound-mass (lb_m) for mass, and the second (s) for time. This system has two principal difficulties. The first is the occurrence of conversion factors (such as 1 ft/12 in), which, unlike those in the metric systems, are not multiples of 10; the second, which has to do with the unit of force, is discussed in the next section.

ASM

Table 2.3-1 SI and CGS Units

Base Units

Quantity	Unit	Symbol
Length	meter (SI)	m
	centimeter (CGS)	cm
Mass	kilogram (SI)	kg
	gram (CGS)	g
Moles	gram-mole	mol or g-mole
Time	second	s
Temperature	kelvin	K
Electric current	ampere	A
Light intensity	candela	cd

Multiple Unit Preferences

tera (T) = 10^{12}	centi (c) = 10^{-2}
giga (G) = 10^{9}	milli (m) = 10^{-3}
mega (M) = 10^{6}	micro (μ) = 10^{-6}
kilo (k) = 10^{3}	nano (n) = 10^{-9}

Derived Units

Quantity	Unit	Symbol	Equivalent in Terms of Base Units
Volume	liter	L	$0.001\ m^3$
			$1000\ cm^3$
Force	newton (SI)	N	$1\ kg \cdot m/s^2$
	dyne (CGS)		$1\ g \cdot cm/s^2$
Pressure	pascal (SI)	Pa	$1\ N/m^2$
Energy, work	joule (SI)	J	$1\ N \cdot m = 1\ kg \cdot m^2/s^2$
	erg (CGS)		$1\ dyne \cdot cm = 1\ g \cdot cm^2/s^2$
	gram-calorie	cal	$4.184\ J = 4.184\ kg \cdot m^2/s^2$
Power	watt	W	$1\ J/s = 1\ kg \cdot m^2/s^3$

Conversion of Units and Conversion Factors

The procedure for converting one set of units to another is simply to multiply any number and its associated units by ratios termed **conversion factors** to arrive at the desired answer and its associated units. If a plane travels at twice the speed of sound (assume that the speed of sound is 1100 ft/s), how fast is it going in miles per hour?

We formulate the conversion as follows

$$\frac{2 \times 1100 \text{ ft}}{\text{s}} \left| \frac{1 \text{ mi}}{5280 \text{ ft}} \right| \frac{60 \text{ s}}{1 \text{ min}} \left| \frac{60 \text{ min}}{1 \text{ hr}} \right.$$

$\frac{\text{ft}}{\text{s}}$ $\frac{\text{mi}}{\text{s}}$ $\frac{\text{mi}}{\text{min}}$

Example Convert 2 km to miles?

Solution

One way to carry out the conversion is to look up a direct conversion factor, namely 1.61 km = 1 mile:

$$\frac{2 \text{ km}}{} \left| \frac{1 \text{ mile}}{1.61 \text{ km}} \right. = 1.24 \text{ mile}$$

AL-AA AL-WINDAWI

Example: An example of a semiconductor is ZnS with a particle diameter of 1.8 nanometers. Convert this value to (a) dm (decimeters) and (b) inches.

$$\text{(a)}\quad \frac{1.8\text{ nm}}{}\left|\frac{10^{-9}\text{ m}}{1\text{ nm}}\right|\frac{10\text{ dm}}{1\text{ m}} = 1.8\times10^{-8}\text{ dm}$$

$$\text{(b)}\quad \frac{1.8\text{ nm}}{}\left|\frac{10^{-9}\text{ m}}{1\text{ nm}}\right|\frac{39.37\text{ in.}}{1\text{ m}} = 7.09\times10^{-8}\text{ in.}$$

Note: In the AE system the conversion of terms involving pound **mass** and pound **force** deserve special attention. Let us start the discussion with Newton's Law:

$$F = Cma$$

Where:
F = force
C = a constant whose numerical value and units depend on those selected for F, m, and a m = mass a = acceleration

In the SI system in which the unit of force is defined to be the Newton (N) when 1 kg is accelerated at 1 m/s2, a conversion factor C = 1 N/(Kg)(m)/s2 must be introduced to have the force be 1 N:

ASMAA AL-WAZNI

$$F = \frac{1\ \text{N}}{\dfrac{(\text{kg})(\text{m})}{\text{s}^2}} \left| \frac{1\ \text{kg}}{\widetilde{m}} \right| \frac{1\ \text{m}}{\text{s}^2} = 1\ \text{N}$$

$\widetilde{C}$ $\widetilde{a}$

Nondimensional Groups:

As you proceed with the study of chemical engineering, you will find that groups of symbols may be put together, either by theory or based on experiment, that have no net units. Such collections of variables or parameters are called **dimensionless** or **nondimensional groups**. One example is the Reynolds number (group) arising in fluid mechanics.

$$\text{Reynolds number} = \frac{D v \rho}{\mu} = N_{RE}$$

where ***D*** is the pipe diameter, say in cm; ***v*** is the fluid velocity, say in cm/s; ***ρ*** is the fluid density, say in g/cm3; and ***μ*** is the viscosity, say in centipoise, units that can be converted to **g/(cm)(s)**. Introducing the consistent set of units for ***D***, ***v***, ***ρ***, and ***μ*** into ***Dvρ/μ***, you will find that all the units cancel out so that the numerical value of **1** is the result of the cancellation of the units.

$$\frac{\cancel{cm}}{} \left| \frac{\cancel{cm}}{\cancel{g}} \right| \frac{\cancel{g}}{\cancel{cm}^3} \left| \frac{(\cancel{cm})\ (\cancel{g})}{\cancel{g}} \right.$$

Questions

1. Which of the following best represents the force needed to lift a heavy suitcase?
a. 25 N b. 25 kN c. 250 N d. 250 kN
2. Pick the correct answer(s); a watt is
a. one joule per second b. equal to 1 (kg)(m2)/s2 c. the unit for all types of power

d. all of the above e. none of the above
3. Is kg/s a basic or derived unit in SI?

4. Answer the following questions yes or no. Can you
a. divide ft by s? b. divide m by cm? c. multiply ft by s? d. divide ft by cm? e. divide m by (deg) K? f. add ft and s? g. subtract m and (deg) K h. add cm and ft? i. add cm and m2? j. add 1 and 2 cm?
5. Why is it not possible to add 1 ft and 1 ft2?

6. What is gc?

7. Is the ratio of the numerator and denominator in a conversion factor equal to unity?

8. What is the difference, if any, between pound force and pound mass in the AE system?

9. Could a unit of force in the SI system be kilogram force?

ASMAA AL WINDAWI

10. Contrast the procedure for converting units within the SI system with that for the AE system.

11. What is the weight of a one pound mass at sea level? Would the mass be the same at the center of Earth? Would the weight be the same at the center of Earth?

12. What is the mass of an object that weighs 9.80 kN at sea level?

13. Explain what dimensional consistency means in an equation.

14. Explain why the so-called dimensionless group has no net dimensions.

ASMAA ALWINDAWI

الاسبوع (9-7)
الوحدة النمطية

Process data representation and analysis

The operation of any chemical process is ultimately based on the measurement of process variables—temperatures, pressures, flow rates, concentrations, and so on. It is sometimes possible to measure these variables directly, but, as a rule, indirect techniques must be used.

Suppose, for example, that you wish to measure the concentration, C, of a solute in a solution. To do so, you normally measure a quantity, X—such as a thermal or electrical conductivity, a light absorbance, or the volume of a titer—that varies in a known manner with C, and then calculate C from the measured value of X. The relationship between C and X is determined in a separate **calibration** experiment in which solutions of known concentration are prepared and X is measured for each solution.

Consider a calibration experiment in which a variable, y, is measured for several values of another variable, x:

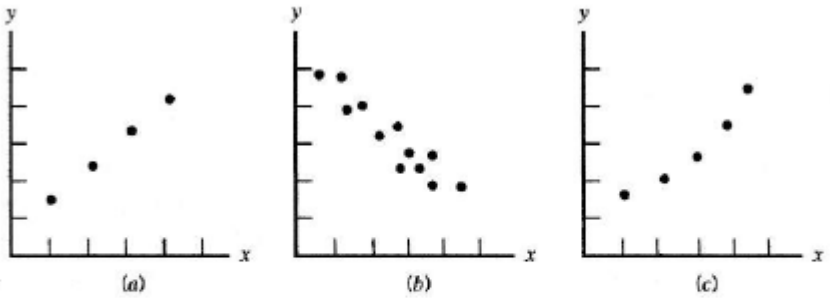

Figure 2.7-1 Representative plots of experimental data.

x	1.0	2.0	3.0	4.0
y	0.3	0.7	1.2	1.8

In the terms of the first paragraph, y might be a reactant concentration or some other process variable and x would be a readily measured quantity (such as conductivity) whose value correlates with the value of y. Our object is to use the calibration data to estimate the value of y for a value of x between tabulated points **(interpolation)** or outside the range of the table data **(extrapolation)**.

A number of interpolation and extrapolation methods are commonly used, including two-point linear interpolation, graphical interpolation, and curve fitting. Which one is most appropriate depends on the nature of the relationship between x and y.

Figure 2.7-1 shows several illustrative (x, y) plots. If the plot of a given data set looks like that shown in plot (a) or (b) of this figure, a straight line would probably be fitted to the data and used as the basis for subsequent interpolation or extrapolation. On the other hand, if the plot is distinctly curved as in plot (c), a curve could be drawn in by inspection and used as the basis of interpolation, or straight-line segments could be fitted to successive pairs of points, or a nonlinear function $y(x)$ that fits the data could be sought.

The technique of drawing a line or curve through the data by inspection is self-explanatory. The other methods are reviewed in the sections that follow.

Two-Point Linear Interpolation

The equation of the line through (x_1, y_1) and (x_2, y_2) on a plot of y versus x is

$$y = y_1 + \frac{x - x_1}{x_2 - x_1}(y_2 - y_1) \qquad \textbf{(2.7-1)}$$

(Can you prove it?) You may use this equation to estimate y for an x between x_1 and x_2; you may also use it to estimate y for an x outside of this range (i.e., to extrapolate the data), but with a much greater risk of inaccuracy.

If the points in a table are relatively close together, linear interpolation should provide an accurate estimate of y for any x and vice versa; on the other hand, if the points are widely separated or if the data are to be extrapolated, one of the curve-fitting techniques to be outlined in the next section should be used.

Fitting a Straight Line

A convenient way to indicate how one variable depends on another is with an equation:

$$y = 3x + 4$$
$$y = 4.24(x - 3)^2 - 23$$
$$y = 1.3 \times 10^7 \sin(2x)/(x^{1/2} + 58.4)$$

If you have an analytical expression for $y(x)$ like those shown above, you can calculate y for any given x or (with a somewhat greater effort) determine x for any given y, or you can program a computer to perform these calculations.

Suppose the values of a dependent variable y have been measured for several values of an independent variable x, and a plot of y versus x on rectangular coordinate axes yields what appears to be a straight line. The equation you would use to represent the relationship between x and y is then

$$y = ax + b \qquad \textbf{(2.7-2)}$$

If the points show relatively little scatter, like those in Figure 2.71*a*, a line may then be drawn through them by inspection, and if (x_1, y_1) and (x_2, y_2) are two points—which may or may not be data points—on the line, then

Slope:
$$a = \frac{y_2 - y_1}{x_2 - x_1} \qquad \textbf{(2.7-3)}$$

Intercept:
$$b \begin{cases} = y_1 - ax_1 \\ = y_2 - ax_2 \end{cases} \qquad \textbf{(2.7-4)}$$

Once a has been calculated from Equation 2.7-3 and b has been determined from either of Equations 2.7-4, it is good practice to check the result by verifying that Equation 2.7-2 is satisfied at the point—(x_1, y_1) or (x_2, y_2)—*not* used in the calculation of b.

EXAMPLE 2.7-1 ***Fitting a Straight Line to Flowmeter Calibration Data***

Rotameter calibration data (flow rate versus rotameter reading) are as follows:

Flow Rate $\dot{V}$(L/min)	Rotameter Reading R
20.0	10
52.1	30
84.6	50
118.3	70
151.0	90

1. Draw a calibration curve and determine an equation for $\dot{V}(R)$.
2. Calculate the flow rate that corresponds to a rotameter reading of 36.

SOLUTION

1. The calibration curve appears as follows:

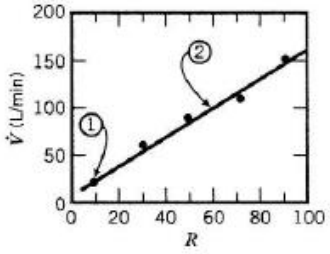

A line drawn through the data by visual inspection passes through the points ($R_1 = 10$, $\dot{V}_1 = 20$) and ($R_2 = 60, \dot{V}_2 = 101$). Therefore,

$$\dot{V} = aR + b \quad \text{(Since the data fall on a line)}$$

$$a = \frac{\dot{V}_2 - \dot{V}_1}{R_2 - R_1} = \frac{101 - 20}{60 - 10} = 1.62 \quad \text{(From Equation 2.7-3)}$$

$$b = \dot{V}_1 - aR_1 = 20 - (1.62)(10) = 3.8 \quad \text{(From Equation 2.7-4)}$$

The result is, therefore,

$$\boxed{\dot{V} = 1.62R + 3.8}$$

Check: At point ②,

$$aR_2 + b = (1.62)(60) + 3.8 = 101 = \dot{V}_2$$

2. At $R = 36, \dot{V} = (1.62)(36) + 3.8 = \boxed{62.1 \text{ L/min}}$.

Fitting Nonlinear Data

During a recent week at a major university, 423 experimenters separately measured and plotted data and found that their data points did not lie on straight points; 416 of these people shrugged their shoulders, said "Close enough," and drew a line anyway; and the other seven went about finding an equation other than $y = ax + b$ to relate the variables.

Fitting a nonlinear equation (anything but $y = ax + b$) to data is usually much harder than fitting a line; however, with some nonlinear equations you can still use straight-line fitting if you plot the data in a suitable manner. Suppose, for example, that x and y are related by the equation $y^2 = ax^3 + b$. A plot of measured y versus x data would clearly be curved; however, a plot of y^2 versus x^3 would be a straight line with a slope a and intercept b. More generally, if any two quantities are related by an equation of the form

$$(\text{Quantity } 1) = a\,(\text{Quantity } 2) + b$$

then a plot of the first quantity (y^2 in the above example) versus the second (x^3) on rectangular coordinates yields a straight line with slope a and intercept b.

Here are several additional examples of plots that yield straight lines:

1. $y = ax^2 + b$. Plot y versus x^2.
2. $y^2 = \frac{a}{x} + b$. Plot y^2 versus $\frac{1}{x}$.
3. $\frac{1}{y} = a(x + 3) + b$. Plot $\frac{1}{y}$ versus $(x + 3)$.
4. $\sin y = a(x^2 - 4)$. Plot $\sin y$ versus $(x^2 - 4)$. The line through the data must be drawn through the origin. (Why?)

ASMAA

Even if the original equation is not in a proper form to generate a linear plot, you can sometimes rearrange it to get it into such a form:

5. $y = \dfrac{1}{C_1 x - C_2} \Longrightarrow \dfrac{1}{y} = C_1 x - C_2$

Plot $\dfrac{1}{y}$ versus x. Slope $= C_1$, intercept $= -C_2$.

6. $y = 1 + x(mx^2 + n)^{1/2} \Longrightarrow \dfrac{(y-1)^2}{x^2} = mx^2 + n$

Plot $\dfrac{(y-1)^2}{x^2}$ versus x^2. Slope $= m$, intercept $= n$.

Let us summarize the procedure. If you have (x, y) data that you wish to fit with an equation that can be written in the form $f(x, y) = ag(x, y) + b$,

1. Calculate $f(x, y)$ and $g(x, y)$ for each tabulated (x, y) point, and plot f versus g.
2. If the plotted points fall on a straight line, the equation fits the data. Choose two points on the line—(g_1, f_1) and (g_2, f_2)—and calculate a and b as outlined in the previous section.

$$a = \frac{f_2 - f_1}{g_2 - g_1} \qquad b = f_1 - ag_1 \qquad \text{or} \qquad b = f_2 - ag_2$$

ASMAA A

EXAMPLE 2.7-2 ***Linear Curve-Fitting of Nonlinear Data***

A mass flow rate $\dot{m}$(g/s) is measured as a function of temperature T(°C).

T	10	20	40	80
$\dot{m}$	14.76	20.14	27.73	38.47

There is reason to believe that $\dot{m}$ varies linearly with the square root of T:

$$\dot{m} = aT^{1/2} + b$$

Use a straight-line plot to verify this formula and determine a and b.

SOLUTION

If the formula is correct, a plot of $\dot{m}$ versus $T^{1/2}$ should be linear, with slope = a and intercept = b. The data table is augmented by adding a $T^{1/2}$ row:

T	10	20	40	80
$T^{1/2}$	3.162	4.472	6.325	8.944
$\dot{m}$	14.76	20.14	27.73	38.47

and $\dot{m}$ is plotted versus $T^{1/2}$.

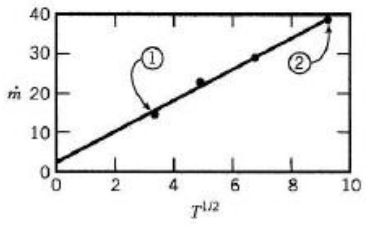

Since the plot is linear, the proposed formula is verified. A line drawn through the data points passes through the first and last points, so these points may be used to calculate the slope and intercept:

Fitting a Line to Scattered Data

There is little problem fitting a line to data that look like this:

Life being the way it is, however, you are much more likely to come up with something more like this:

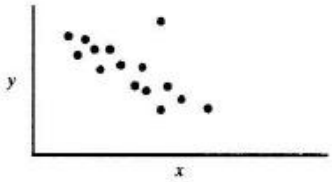

When data points are as scattered as these, you can draw any number of lines that appear to fit the points equally well (or equally poorly, depending on your point of view). The question is which line to use.

A number of statistical techniques exist for fitting a function to a set of scattered data. The application of the most common of these techniques—*linear regression* or the *method of least squares*—to the fitting of a straight line to a series of y versus x data points is outlined and illustrated in Appendix A.1, and the use of this technique is required for the solution of Problems 2.39 through 2.42 at the end of this chapter.

ASMA

SUMMARY

This chapter introduces some fundamental problem-solving tools that you will need in the rest of this course, in subsequent engineering and science courses, and almost every time in your career when you perform mathematical calculations. The main points of the chapter are as follows.

- You can convert a quantity expressed in one set of units into its equivalent in other dimensionally consistent units using conversion factors, like those in the table on the inside front cover of the text.
- A *weight* is the force exerted on an object by gravitational attraction. The weight of an object of mass m may be calculated as $W = mg$, where g is the acceleration of gravity at the location of the object. At sea level on the earth, $g = 9.8066\ \text{m/s}^2 = 32.174\ \text{ft/s}^2$. To convert a weight (or any force) in natural units like $\text{kg}\cdot\text{m/s}^2$ or $\text{lb}_\text{m}\cdot\text{ft/s}^2$ to its equivalent in a derived force unit like N or lb_f, use the conversion factor table.
- The significant figures (s.f.) with which a number is reported specify the precision with which the number is known. For instance, $x = 3.0$ (2 s.f.) states that x is somewhere between 2.95

PROBLEMS

2.1. Using dimensional equations, convert
(a) 3 wk to milliseconds.
(b) 38.1 ft/s to miles/h.
(c) 554 $\text{m}^4/(\text{day}\cdot\text{kg})$ to $\text{cm}^4/(\text{min}\cdot\text{g})$.

2.2. Using the table of conversion factors on the inside front cover, convert
(a) 760 miles/h to m/s.
(b) 921 kg/m^3 to $\text{lb}_\text{m}/\text{ft}^3$.
(c) 5.37×10^3 kJ/min to hp.

2.3. Using a single dimensional equation, estimate the number of golf balls it would take to fill your classroom.

2.4. Using a single dimensional equation, estimate the number of steps it would take you, walking at your normal stride, to walk from the Earth to Alpha Centauri, a distance of 4.3 light-years. The speed of light is 1.86×10^5 miles/s.

2.5. A frustrated professor once claimed that if all the reports she had graded in her career were stacked on top of one another, they would reach from the Earth to the moon. Assume that an average report is the thickness of about 10 sheets of printer paper and use a single dimensional equation to estimate the number of reports the professor would have had to grade for her claim to be valid.

Student Workbook

2.6. You are trying to decide which of two automobiles to buy. The first is American-made, costs $14,500, and has a rated gasoline mileage of 28 miles/gal. The second car is of European manufacture, costs

الاسبوع (10-16)

Material Balances and Separations

Introduction to Material Balances

The Concept of a Material Balance

A **material balance** is nothing more than the application of the law of the **conservation of mass:**

"Matter is neither created nor destroyed"

Open and Closed Systems

a. System

By **system** we mean any arbitrary portion of or a whole **process** that you want to consider for analysis. You can define a **system** such as a **reactor**, a **section of a pipe**. Or, you can define the **limits** of the **system** by drawing the **system boundary**, namely a line that encloses the portion of the process that you want to analyze.

b. Closed System

Figure 6.1 shows a two-dimensional view of a three-dimensional vessel holding **1000 kg of H_2O**. **Note that material neither enters nor leaves the vessel**, that is, **no material crosses the system boundary**. Changes can take place **inside the system**, but for a **closed system**, **no mass exchange occurs with the surroundings**.

ASMAA ALWINDAWI

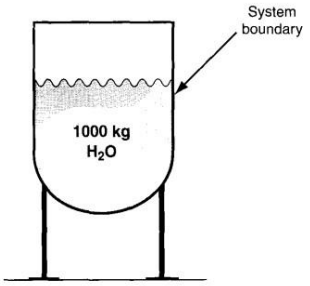

Figure 5.1 A closed system.

c. Open System

Figure 6.2 is an example of an **open system** (also called a **flow system**) because material crosses the system boundary.

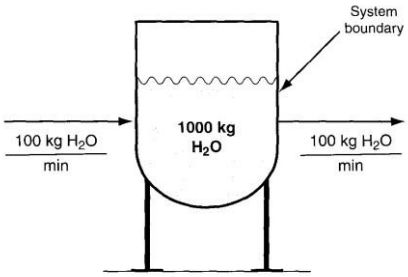

Figure 5.2 An open steady – state system.

Steady-State and Unsteady-State Systems

a. Steady – State System

Because the rate of addition of water is equal to the rate of removal, the amount of water in the vessel shown in **Figure 6.2** remains

ASMAA AL-TINDAWI

constant at its original value (**1000 kg**). We call such a **process** or **system** a **steady – state process** or a **steady – state system** because

1. The **conditions** inside the process (specifically the amount of water in the vessel in Figure 6.2) **remain unchanged with time**, and
2. The **conditions** of the flowing streams **remain constant with time**.

✶ Thus, in a **steady-state process**, by definition all of the conditions in the process **(e.g., temperature, pressure, mass of material, flow rate, etc.)** remain constant with time. A **continuous process** is one in which material enters and/or leaves the system without interruption.

b. Unsteady – State System

Because the amount of water in the system **changes with time (Figure 6.3)**, the **process** and **system** are deemed to be an **unsteady – state** (**transient**) **process or system**.

✶ For an **unsteady-state process**, not all of the **conditions** in the **process (e.g., temperature, pressure, mass of material, etc.)**

ASMAA ALWINDAWI

remain constant with time, and/or the **flows** in and out of the **system** can **vary with time**.

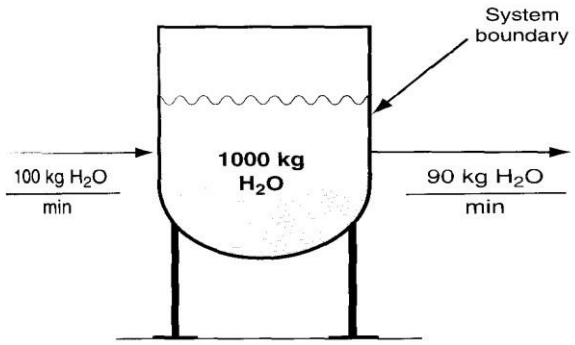

Figure 5.3 Initial conditions for an open unsteady – state system with accumulation.

✶ Figure 5.4 shows the system after 50 minutes of accumulation (Fifty minutes of accumulation at 10 kg/min amounts to 500 kg of total accumulation).

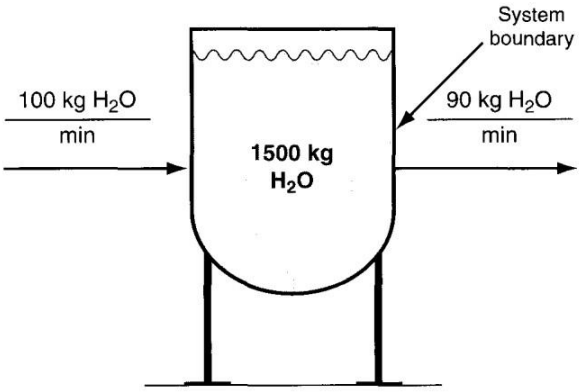

Figure 5.4 The condition of the open unsteady – state system with accumulation after 50 minutes.

ASMA' ALWI JAWI

- **Figures 5.5** and **5.6** demonstrate **negative accumulation**.

Note that the amount of water in the system decreases with time at the rate of **10 kg/min**.

Figure 6.6 shows the system after **50 minutes** of operation.

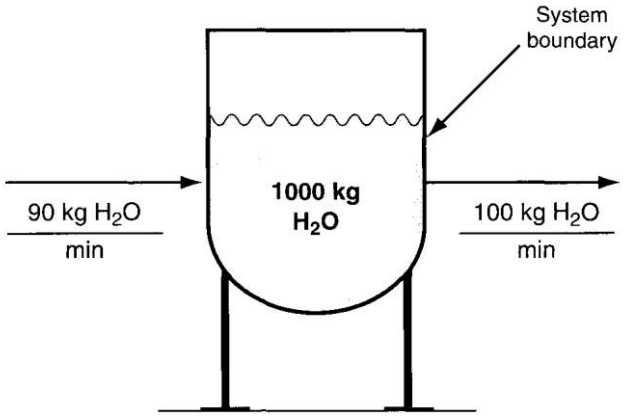

Figure 5.5 Initial conditions for an unsteady – state process with negative accumulation.

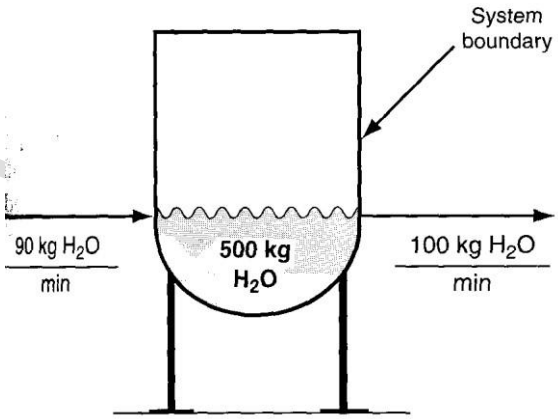

Figure 5.6 Condition of the open unsteady – state system with negative accumulation after 50 minutes.

- **The material balance for a single component process is**

$$\left\{\begin{matrix}\text{Accumulation of material}\\ \text{within the system}\end{matrix}\right\} = \left\{\begin{matrix}\text{Total flow into}\\ \text{the system}\end{matrix}\right\} - \left\{\begin{matrix}\text{Total flow out}\\ \text{of the system}\end{matrix}\right\} \quad \ldots 6.1$$

Equation 6.1 can apply to **moles** or any **quantity** that is **conserved**. As an example, look at **Figure 5.7** in which we have converted all of the mass quantities in **Figure 5.2** to their equivalent values in moles.

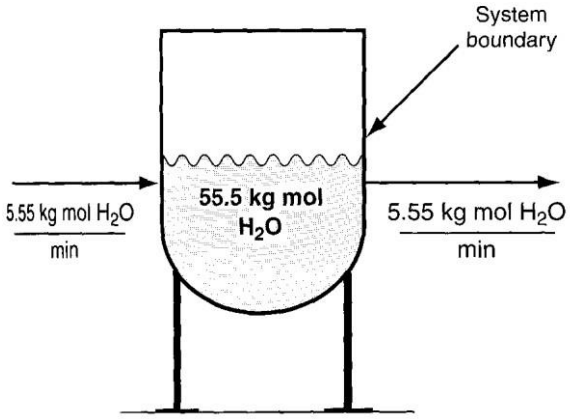

Figure 5.7 The system in Figure 5.2 with the flow rates shown in kg mol.

If the process is in the **steady state**, the **accumulation** term by definition is **zero**, and **Equation 6.1** simplifies to a famous truism

What goes in must come out (In = Out) …6.2

If you are analyzing an unsteady-state process, the accumulation term over a time interval can be calculated as

$$\{\text{Accumulation}\} = \left\{\begin{matrix}\text{Final material}\\ \text{in the system}\end{matrix}\right\} - \left\{\begin{matrix}\text{Initial material}\\ \text{in the system}\end{matrix}\right\} \qquad (6.3)$$

The **times** you select for the final and initial conditions can be anything, but you usually select an **interval** such as **1 minute** or **1 hour** rather than specific times.

✶ When you combine **Equations 6.1 and 6.3** you get the **general material balance** for a component in the system in the **absence of reaction**

$$\left\{\begin{matrix}\text{Final material}\\ \text{in the system}\\ \text{at } t_2\end{matrix}\right\} - \left\{\begin{matrix}\text{Initial material}\\ \text{in the system}\\ \text{at } t_1\end{matrix}\right\} = \left\{\begin{matrix}\text{Flow into}\\ \text{the system}\\ \text{from } t_1 \text{ to } t_2\end{matrix}\right\} - \left\{\begin{matrix}\text{Flow out of}\\ \text{the system}\\ \text{from } t_1 \text{ to } t_2\end{matrix}\right\} \quad \ldots 6.4$$

Example

Will you save money if instead of buying premium 89 octane gasoline at $1.269 per gallon that has the octane you want, you blend sufficient 93 octane supreme gasoline at $l.349 per gallon with 87 octane regular gasoline at $1.149 per gallon?

Solution

ASMAA - WINDAWI

Choose a **basis** of **1 gallon of 89 octane gasoline**, the desired product. The system is the gasoline tank.

- For simplicity, assume that **no gasoline exists** in the tank at the start of the blending, and **one gallon exists** in the tank at the end of the blending.
- This arrangement corresponds to an **unsteady-state process**. Clearly it is an **open system**.

The **initial number of gallons** in the system is **zero** and the **final number of gallons** is **one**. Let **x** = the number of gallons of **87** octane gasoline added, and **y** = the number of gallons of **93** octane added to the blend.

Since **x + y = 1** is the total flow into the tank,

$y = 1 - x$

According to Equation (6.4) the balance on the octane number is

$$\underset{\text{Accumulation}}{\left|\frac{89 \text{ octane}}{1 \text{ gal}}\right|\frac{1 \text{ gal}}{}} - 0 = \underset{\text{Inputs}}{\left|\frac{87 \text{ octane}}{1 \text{ gal}}\right|\frac{x \text{ gal}}{}} + \left|\frac{93 \text{ octane}}{1 \text{ gal}}\right|\frac{(1 - x) \text{ gal}}{}$$

The solution is x = 2/3 gal and thus y = 1 – x = 1/3 gal. The cost of the blended gasoline is (2/3) ($l.l49) + (1/3) ($l.349) = $ 1.216 A value less than the cost of the 89 octane gasoline ($l.269).

ASMAA AL WINDAWI

Multiple Component Systems

Suppose the input to a vessel contains **more than one component**, such as 100 kg/min of a 50% water and 50% sugar (sucrose, $C_{12}H_{22}O_{11}$, MW = 342.3) mixture (see Figure 5.8). The mass balances with respect to the **sugar and water**, balances that we call **component balances**.

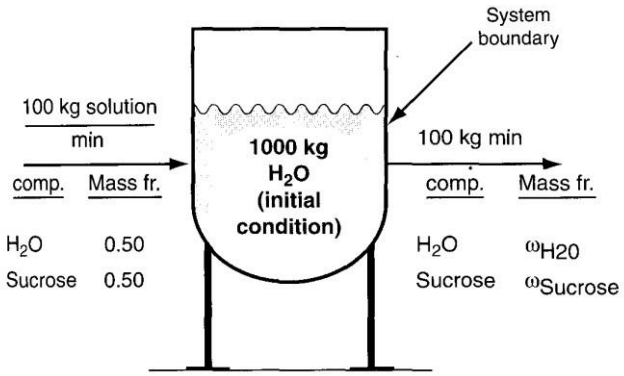

Figure 58 An open system involving two components.

For Example, look at the mixer shown in Figure 6.9, an apparatus that mixes two streams to increase the concentration of NaOH in a dilute solution. **The mixer is a steady – state open system**. Initially the mixer is empty, and after 1 hour it is empty again.

Basis = 1 hour for convenience. As an alternate to the **basis** we selected you could select **F_1 = 9000 kg/hr as the basis, or F_2 = 1000 kg/hr as the basis**; the **numbers** for this example would not change – just the **units** would change. Here are the components and total balances in **kg**:

Balances	Flow in F_1	Flow in F_2	Flow out	Accum.
NaOH	450	500	950	= 0
H_2O	8,550	500	9,050	= 0
Total	9,000	1,000	10,000	= 0

We can convert the kg shown in Figure 6.9 to kg moles by dividing each compound by its respective molecular weight (NaOH = 40 and H_2O = 18).

$$\text{NaOH:} \quad \frac{450}{40} = 11.25 \qquad \frac{500}{40} = 12.50 \qquad \frac{950}{40} = 23.75$$

$$H_2O: \quad \frac{8550}{18} = 475 \qquad \frac{500}{18} = 27.78 \qquad \frac{9050}{18} = 502.78$$

Then the component and total balances in **kg mol** are:

Balances	Flow in F_1	Flow in F_2	Flow out	Accum.
NaOH	11.25	12.50	23.75	= 0
H_2O	475	27.78	502.78	= 0
Total	486.25	40.28	536.53	= 0

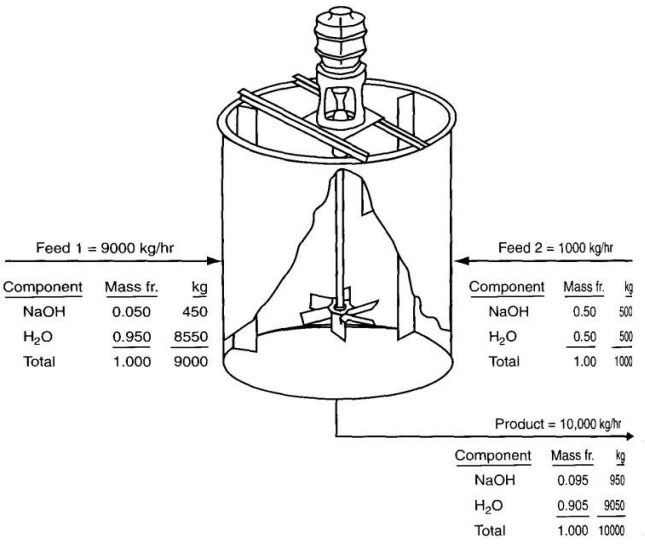

الاسبوع (17-20)

الوحدة النمطية

Reactors for Environmental Engineering

Chemical reaction in a system requires the augmentation of **Equation 6.4** to take into account the **effects of the reaction**. To illustrate this point, look at **Figure 6.10**, which shows a steady – state system in which **HC1** reacts with **NaOH** by the following reaction:

$$NaOH + HCl \longrightarrow NaC1 + H_2O$$

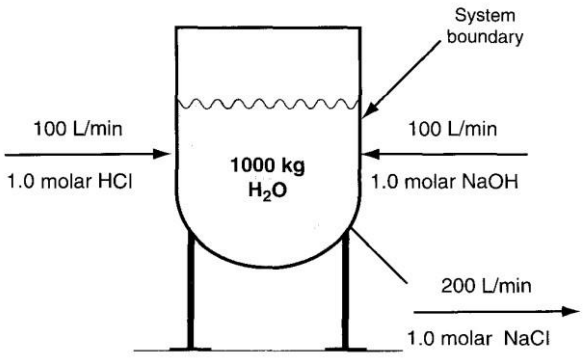

Figure 5.10 Reactor for neutralizing HC1 with NaOH.

Equation 6.4 must be augmented to include terms for the **generation** and **consumption** of components by the **chemical reaction** in the system as follows

ASMA ALWINDAWI

$$\left\{\begin{matrix}\text{Accumulation}\\ \text{within the}\\ \text{system}\end{matrix}\right\} = \left\{\begin{matrix}\text{Input}\\ \text{through}\\ \text{the system}\\ \text{boundaries}\end{matrix}\right\} - \left\{\begin{matrix}\text{Output}\\ \text{through}\\ \text{the system}\\ \text{boundaries}\end{matrix}\right\} + \left\{\begin{matrix}\text{Generation}\\ \text{within the}\\ \text{system}\end{matrix}\right\} - \left\{\begin{matrix}\text{Consumption}\\ \text{within the}\\ \text{system}\end{matrix}\right\} \quad \ldots 6.5$$

Material Balances for Batch and Semi-Batch Processes

- A **batch process** is used to process a **fixed amount** of material each time it is operated. **Initially**, the material to be processed is charged into the system. After processing of the material is complete, the products are **removed**.
- **Batch processes** are used **industrially** for speciality processing applications (e.g., producing **pharmaceutical** products), which typically operate at relatively **low production rates**.
- Look at Figure 6.11a that illustrates what occurs at the start of a batch process, and after thorough mixing, the final solution remains in the system (Figure 6.11b).

ASMAA ALWINDAWI

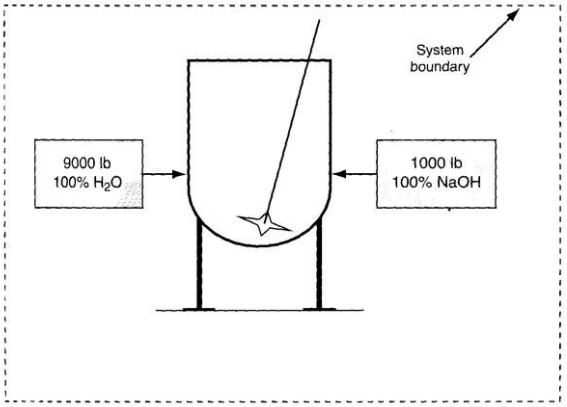

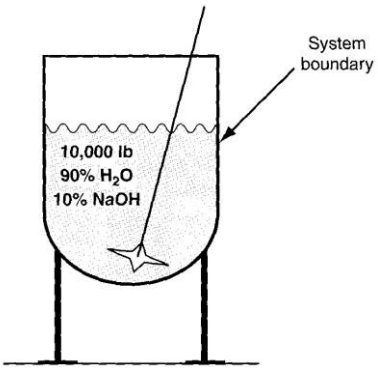

Figure 5.11a The initial state of a batch mixing process. **Figure 5.11b The final state of a batch mixing process.**

✶ We can summarize the **hypothetical operation** of the **batch** as a flow system (open system) as follows (**Figure 6.12**):

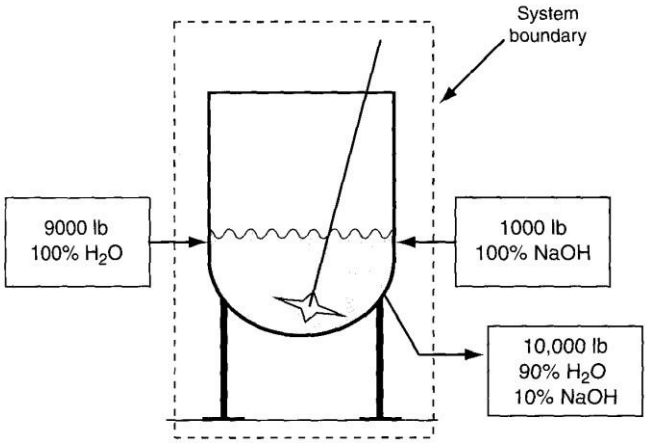

Figure 5.12 The batch process in Figure 6.11 represented as an open system.

⊠ In a **<u>semi-batch process</u>** material **enters** the process during its operation, but does **not leave**. Instead mass is allowed to accumulate

in the process vessel. Product is **withdrawn** only after the process is over.

- **A figure 6.13 illustrates** a **semi-batch mixing process**. Initially the vessel is empty (**Figure 6.13a**). **Figure 6.13b** shows the **semi-batch system** after **1 hour** of operation. **Semi-batch processes** are **open** and **unsteady – state**.

Only flows **enter** the systems, and **none leave**, hence the system is an **unsteady state** – one that you can treat as having **continuous flows**

Solving Material Balance Problems for Single Units without Reaction

The use of material balances in a process allows you **(a)** to calculate the values of the total flows and flows of species in the streams that enter and leave the plant equipment, and **(b)** to calculate the change of conditions inside the equipment.

1. Extraction unit

Example Determine the mass fraction of Streptomycin in the exit organic solvent assuming that no water exits with the solvent and no solvent exits with the aqueous solution. Assume that the density of the aqueous solution is 1 g/cm3 and the density of the organic solvent is 0.6 g/cm3. Figure E8. 1 shows the overall process.

Solution

ASMAA ALWINDAWI

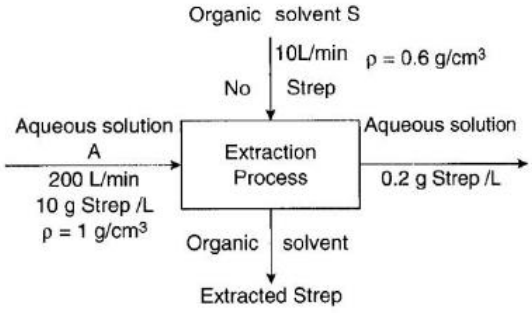

Figure E8.1

Solution

This is an **open** (flow), **steady-state** process without reaction. Assume because of the low concentration of Strep. in the aqueous and organic fluids that the **flow rates** of the **entering** fluids **equal** the flow rates of the **exit** fluids.

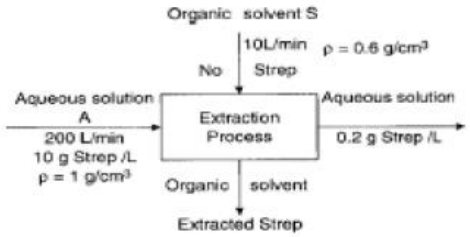

Figure E8.1

Basis: 1 min

Basis: Feed = 200 L (flow of aqueous entering aqueous solution)

- Flow of exiting aqueous solution (same as existing flow)
- Flow of exiting organic solution (same as existing flow)

The material balances are **in = out** in **grams**. Let **x** be the **g** of Strep per **L** of solvent S

Strep. balance:

$$\frac{200\text{ L of A}}{}\left|\frac{10\text{ g Strep}}{1\text{ L of A}}\right. + \frac{10\text{ L of S}}{}\left|\frac{0\text{ g Strep}}{1\text{ L of S}}\right. = \frac{200\text{ L of A}}{}\left|\frac{0.2\text{ g Strep}}{1\text{ L of A}}\right. + \frac{10\text{ L of S}}{}\left|\frac{x\text{ g Strep}}{1\text{ L of S}}\right.$$

x = 196 g Strep/L of solvent

To get the g Strep/g solvent, use the density of the solvent:

Membrane unit

Example

Membranes represent a relatively new technology for the separation of gases. One use that has attracted attention is the separation of nitrogen and oxygen from air. Figure E8.2a illustrates a nanoporous membrane that is made by coating a very thin layer of polymer on a porous graphite supporting layer. What is the composition of the waste stream if the waste stream amounts to 80% of the input stream?

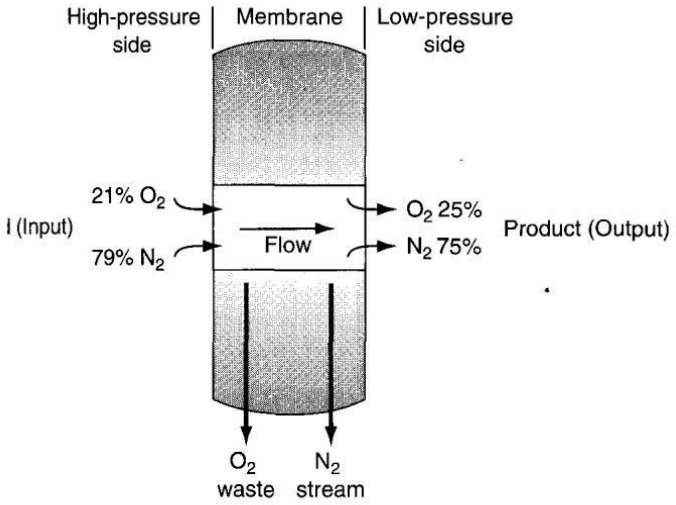

Figure E8.2a

This is an **open**, **steady-state process** without chemical reaction.

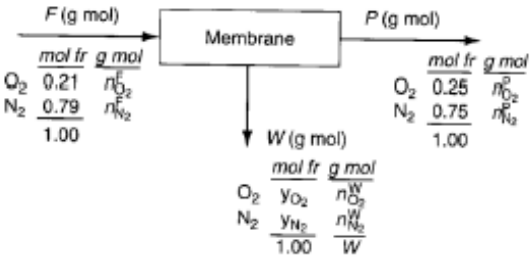

Basis: 100 g mol = F

Basis: F = 100

Specifications: $n_{O_2}^F = 0.21(100) = 21$

$n_{N_2}^F = 0.79(100) = 79$

Distillation column

Example A novice manufacturer of ethyl alcohol (denoted as EtOH) for gasohol is having a bit of difficulty with a distillation column. The process is shown in Figure E8.3. It appears that too much alcohol is lost in the bottoms (waste). Calculate the composition of the bottoms and the mass of the alcohol lost in the bottoms based on the data shown in Figure E8.3 that was collected during 1 hour of operation.

ASMAA ALWAN AL-DAWI

Solution

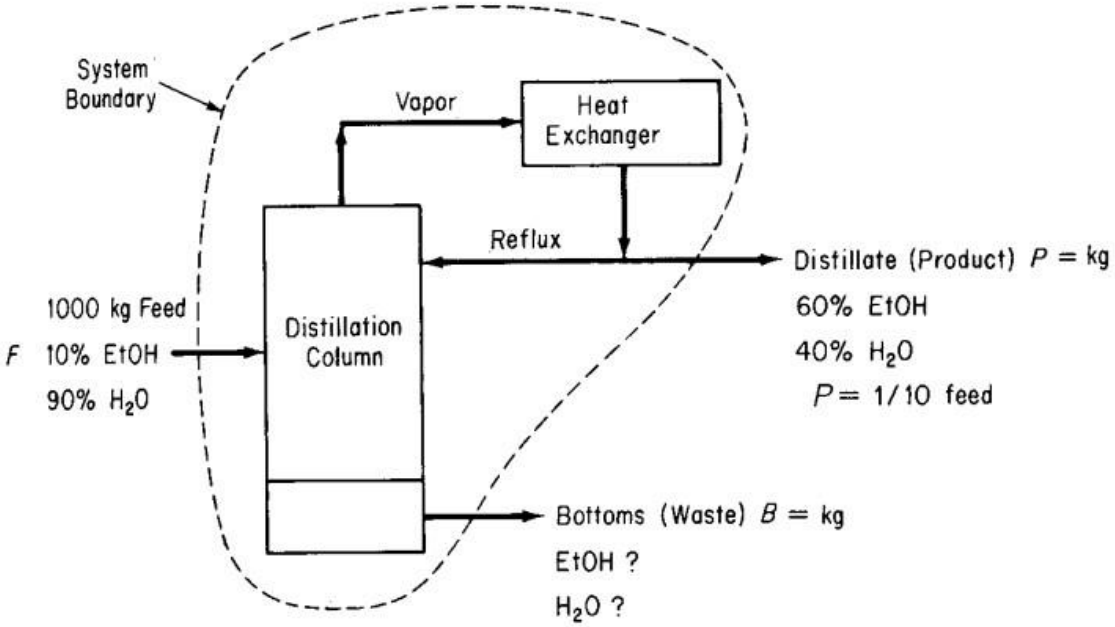

Figure E8.3

ASMAA

We are given that P is (1/10) of F, so that P = 0.1(1000) = 100 kg

Basis: F= 1000 kg

Specifications: $m^F_{EtOH} = 1000(0.10) = 100$

$m^F_{H_2O} = 1000(0.90) = 900$

$m^P_{EtOH} = 0.60P$

$m^P_{H_2O} = 0.40P$

P = (0.1) (F) = 100 kg

Material balances: EtOH and H_2O

Implicit equations: $\Sigma m_i^B = B$ or $\Sigma \omega_i^B = 1$

The total mass balance: $F = P + B$

$B = 1000 - 100 = 900$ kg

The solution for the composition of the **bottoms** can then be computed directly from the material balances:

	kg feed in		*kg distillate out*		*kg bottoms out*	*Mass fraction*
EtOH balance:	0.10(1000)	–	0.60(100)	=	40	0.044
H_2O balance:	0.90(1000)	–	0.40(100)	=	860	0.956
					900	1.000

As a **check** let's use the redundant equation

$$m^B_{EtOH} + m^B_{H_2O} = B \quad \text{or} \quad \omega^B_{EtOH} + \omega^B_{H_2O} = 1$$

$$40 + 860 = 900 = B$$

الاسبوع (21-25)

Energy Flows and Balances

Introduction

An energetic person is one who is continually in motion, someone who has a lot of energy and is always active. But some energetic people never seem to get anything *done*; they expend a lot of effort but have little to show for it. Obviously, it is not enough to be energetic; one is also expected to be *efficient*. Available energy, in order to be useful, must be funneled efficiently into productive use. In this chapter we look at quantities of energy, how it flows and is put to use, and the efficiencies of such use.

UNITS OF MEASURE

One of the earliest measures of energy, still widely used by American engineers, is the British thermal unit (BTU), defined as the amount of energy necessary to heat one pound of water one degree Fahrenheit. The internationally accepted unit of energy is the joule. Other

ASMAA ALWARDAWI

common units for energy are the calorie and kilowatt-hour (kWh)—the former used in natural sciences, the latter in engineering. Table 7.1 shows the conversion factors for all these units, emphasizing the fact that *all* are measures of energy and, thus, are interchangeable.

E X A M P L E/ Problem One gallon of gasoline has an energy value of 126,000 BTU. Express this in
(a) calories, (b) joules, (c) kWh.

Solution
a. 126,000 BTU × 252 cal/BTU = 3.17×10^7 cal
b. 126,000 BTU × 1054 J/BTU = 1.33×10^8 J
c. 126,000 BTU × 2.93×10^{-4} kWh/BTU = 37 kWh

Table 7.1 Energy Conversion Factors

To convert	to	multiply by
BTU	calories	252
	joules	1054
	kWh	0.000293
Calories	BTU	0.00397
	joules	4.18
	kWh	0.00116
Joules	BTU	0.000949
	calories	0.239
	kWh	2.78×10^{-7}
Kilowatt-hours	BTU	3413
	calories	862
	joules	3.6×10^6

ENERGY BALANCES AND CONVERSION

There are, of course, many forms of energy, such as chemical, heat, and potential energy due to elevation. Often the form of energy available is not the form that is most useful, and one form of energy must be converted to another form. For example, the water in a mountain lake has potential energy

and can be run through a turbine to convert this potential to electrical energy that can, in turn, be converted to heat or light, both forms of useful energy. Chemical energy in organic matter, stored in the carbon–carbon and carbon–hydrogen bonds formed by plants, can be severed by a process such as combustion, which liberates

Heat energy that can, in turn, be used directly or indirectly to produce steam to drive electrical generators. Wind has kinetic energy, and a windmill can convert this to mechanical energy that can, be further converted to electrical energy to produce heat energy, which warms your house. Energy conversion is, thus, an important and ancient engineering process. Unfortunately, energy conversions are *always* less than 100% efficient. Energy (of whatever kind), when expressed in common units, can be pictured as a quantity that flows, and thus, it is possible to analyze energy flows by using the same concepts used for material flows and balances. As before, a black box is any process or operation into which certain flows enter and from which others leave. If all the flows can be correctly accounted for, then there must be a balance.

Looking at Figure 7.1, note that in a black box the energy in has to equal the energy out (energy wasted in the conversion + useful energy) plus the energy accumulated in the box. This can be expressed as

$$\begin{bmatrix}\text{Rate of energy ACCUMULATED}\end{bmatrix} = \begin{bmatrix}\text{Rate of energy IN}\end{bmatrix} - \begin{bmatrix}\text{Rate of energy OUT}\end{bmatrix} + \begin{bmatrix}\text{Rate of energy PRODUCED}\end{bmatrix} - \begin{bmatrix}\text{Rate of energy CONSUMED}\end{bmatrix}$$

Of course, energy is never produced or consumed in the strict sense; it is simply changed in form. In addition, just as processes involving materials can be studied in their steady state condition, defined as no change occurring over time, energy systems can also be thought of as being in steady state.

ASMAA ALWINDAWI

Obviously, if there is no change over time, there cannot be a continuous accumulation of energy, so the equation must read

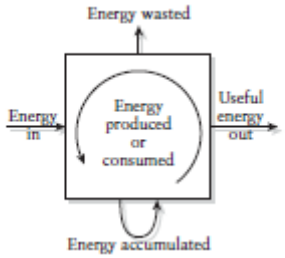

$$[\text{Rate of energy IN}] = [\text{Rate of energy OUT}]$$

Remember that energy out has two terms (energy wasted in the conversion and useful energy), so

$$[\text{Rate of energy IN}] = [\text{Rate of useful energy OUT}] + [\text{Rate of wasted energy OUT}]$$

If the input and useful output from a black box are known, the efficiency of the process can be calculated as

$$\text{Efficiency (\%)} = \frac{\text{Useful energy OUT}}{\text{Energy IN}} \times 100$$

E X A M P L E/ Problem A coal-fired power plant uses 1000 Mg of coal per day. (*Note*: 1 Mg is 1000 kg, commonly called a metric ton or simply a tonne.) The energy value of the coal is 28,000 kJ/kg. The plant produces 2.8 × 106 kWh of electricity each day. What is the efficiency of the power plant?

Solution

Energy IN = *(*28,000 kJ/kg) (1000 Mg/day) (1000 kg/Mg)
= 28 × 109 kJ/day
Useful energy output = *(*2.8 × 106 kWh/day) (3.6 × 106 J/kWh) (10−3 kJ/J)
= 10.1 × 109 kJ/day
Efficiency (%) = [10.1 × 109 kJ/day]/[28 × 109 kJ/day] × 100 = 36%

ENERGY SOURCES AND AVAILABILITY

It makes sense for power utilities to use the most efficient fuels possible because these will produce the least ash for disposal and will most likely be the cheapest to use in terms of kilowatt-hours of electricity produced per dollar of fuel cost. But the best fuels, natural gas and oil, are in finite supply. Estimates vary as to how much natural gaseous and liquid fuels remain in earth's crust within our reach, but most experts agree that, if they continue to be used at the present expanding rate, the existing supplies will be depleted within 50 years. Others argue that, as the supplies begin to run low and the price of these fuels increases, other fuels will become less expensive by comparison, so market forces will limit the use of the resources.
If the pessimists are correct and the world runs out of oil and natural gas within 50 years, will the next generation blame us for our unwise use of natural resources? Or should we, indeed, even be worried about the next

ASMAA ALWINDAWI

generation? There is a strong argument to be made that the most important thing we can do for the coming generations is not to plan for them. The world will be so different, and the state of technology would have changed so markedly, that it is impossible to estimate what future generations would need. For us to deprive ourselves of needed resources today just so some future person would have the benefit of these resources is, by this argument, simply ludicrous.

On the other hand, are there not some things we can be fairly certain of in terms of the future generations? We can fairly well guess that they will appreciate and value many of the same things we do. They will like to have clean air and plentiful and safe water.

They will like to have open spaces and wilderness. They will appreciate it if there are no hazardous waste time bombs. And (this is moot) they will appreciate that some of what we regard as natural resources are there for them to use and manage. But the most important question is why we should care at all about the future generations. What have they ever done for us? Where is the quid pro quo in all this? If we ignore the problem of reciprocity and decide to conserve energy resources, what are the available sources of renewable energy? The sources in present use include

- ✓ hydropower from rivers
- ✓ hydropower from tidal estuaries
- ✓ solar power
- ✓ refuse and other waste materials
- ✓ wind
- ✓ wood and other biomass, such as sugarcane and rice hulls.

ASMAA ALWINDAWI

The nonrenewable energy sources include

- ✓ nuclear power
- ✓ coal, peat, and similar materials
- ✓ natural gas
- ✓ oil.

The nonrenewable sources are our energy capital, the amount of energy goods that we have to spend. The renewable sources are analogous to our energy income, resources that we can continue to use as long as the sun shines and the wind blows.

Energy Equivalence

There is a big difference between potentially available energy and energy that can be efficiently harnessed. For example, one of the greatest sources of potential energy is tidal energy. The difficulty, however, is how to convert this potential to a useful form, such as
electrical energy. With a few notable exceptions, such conversions have not proven cost effective; that is, the electrical energy from tidal power costs much more than the electrical energy produced by other means.

Further, some types of conversions may not be *energy* efficient, in that it takes more energy to produce the marketable form of energy than the final energy produced. For example, the energy necessary to collect and process household refuse may be more (in terms of BTU) than the energy produced by burning the refuse-derived fuel and producing electricity.

An important distinction must be made between *arithmetic energy equivalence* and

ASMA A ALWINDAWI

conversion energy equivalence. The former is calculated simply on the basis of energy while the latter takes into account the energy loss in conversion.

EXAMPLE/ Problem What are the arithmetic and conversion energy equivalents between gasoline (20,000 BTU/lb) and refuse-derived fuel (5000 BTU/lb)?

Solution

Arithmetic energy equivalence = 20,000 BTU/lb gasoline
5,000 BTU/lb refuse
= 4 lb refuse/1 lb gasoline
But the processing of refuse to make the fuel also requires energy. This can be estimated at perhaps 50% of the refuse-derived fuel energy, so the actual *net* energy in the refuse is 2,500 BTU/lb. Therefore,

Conversion energy equivalence = 20,000 BTU/lb gasoline
2,500 BTU/lb refuse = 8 lb refuse/1 lb gasoline

Electric Power Production

One of the most distressing conversion problems is the production of electricity from fossil fuels. The present power plants are less than 40% efficient. Why is this? First, consider how a power plant operates. Figure 7.5 shows that the water is heated to steam in a boiler, and the steam is used to run a turbine that, in turn, drives a generator. The waste steam must be condensed to water before it can again be converted to high pressure steam. This system can be simplified as in Figure 7.6, and the resulting schematic is

ASMAA ALWINDAWI

called a *heat engine*. If the work performed is also expressed as energy and steady state is assumed, an energy balance on this heat engine yields

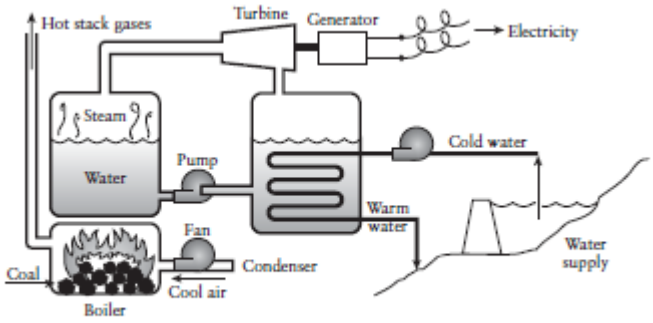

Figure 7.5 Simplified drawing of a coal-fired power plant.

ASMAA ALWAWI

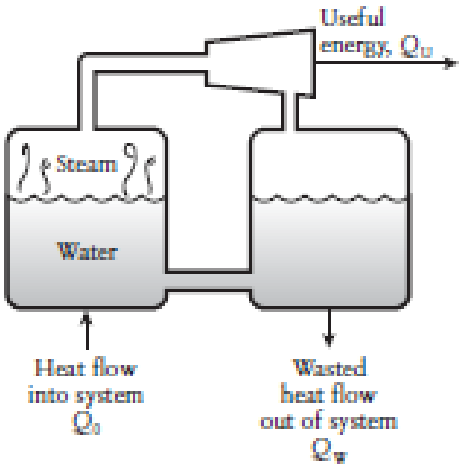

Figure 7.6 The heat engine.

$$\begin{bmatrix}\text{Rate of}\\ \text{energy}\\ \text{ACCUMULATION}\end{bmatrix} = \begin{bmatrix}\text{Rate of}\\ \text{energy}\\ \text{IN}\end{bmatrix} - \begin{bmatrix}\text{Rate of}\\ \text{useful energy}\\ \text{OUT}\end{bmatrix} - \begin{bmatrix}\text{Rate of}\\ \text{wasted energy}\\ \text{OUT}\end{bmatrix}$$

$$0 = Q_0 - Q_U - Q_W$$

where Q_0 = energy flow into the black box
Q_U = useful energy out of the black box
Q_W = wasted energy out of the black box

The efficiency of this system, as previously defined, is

$$\text{Efficiency } (\%) = \frac{Q_U}{Q_0} \times 100$$

From thermodynamics it is possible to prove that the most efficient engine (least wasted energy) is called the Carnot engine and that its efficiency is determined by the absolute temperature of the surroundings. The efficiency of the Carnot engine is defined as

$$E_C\,(\%) = \frac{T_1 - T_0}{T_1} \times 100$$

where T_1 = absolute temperature of the boiler
T_0 = absolute temperature of the condenser (cooling water)

Because this is the best possible, any real-world system cannot be more efficient:

$$\frac{Q_U}{Q_0} \leq \frac{T_1 - T_0}{T_1}$$

A real power plant also has losses in energy due to hot stack gases, evaporation, friction losses, etc. The best plants so far have been hovering around 40% efficiency. When various energy losses are subtracted from nuclear-powered plants, the efficiencies for these plants seem to be even lower than for fossil-fuel plants. If 60% of the heat energy in coal is not used, it must be wasted, and this energy must somehow be dissipated into the environment. Waste heat energy is emitted from the power plant in two primary ways: stack gases and cooling water. The schematic of the power plant in Figure 7.5 can be reduced to a black box and a heat balance performed, as shown in Figure 7.8. Assume for the sake of simplicity that the heat in the cool air is negligible. So the energy balance at steady state is

ASMAA ALWINDAWI

$$\begin{bmatrix}\text{Rate of energy ACCUMULATED}\end{bmatrix} = \begin{bmatrix}\text{Rate of energy IN the coal}\end{bmatrix} - \begin{bmatrix}\text{Rate of energy OUT in the stack gases}\end{bmatrix} - \begin{bmatrix}\text{Rate of energy OUT in the cooling water}\end{bmatrix} - \begin{bmatrix}\text{Rate of energy OUT as useful electrical power}\end{bmatrix}$$

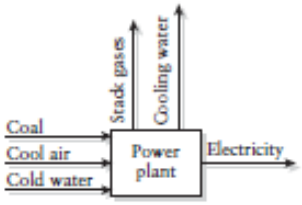

Figure 7.8 The power plant as a black box.

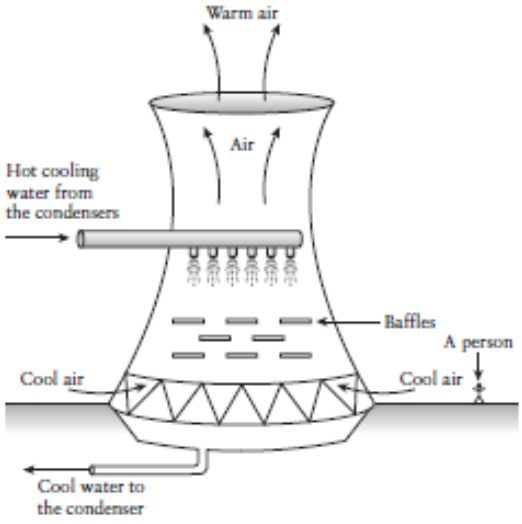

Figure 7.9 Cooling tower used in power plants.

Most states restrict thermal discharges so that the rise above ambient stream temperature levels will be equal to or less than 1◦C. Therefore, some of the heat in the cooling water must be dissipated into the atmosphere before the water is discharged. Various means are used for dissipating this energy, including large shallow ponds and cooling towers. A cutaway drawing of a typical cooling tower is shown in Figure 7.9. Cooling towers represent a substantial additional cost to the generation of electricity. They are estimated to double the cost of power production for fossil-fuel plants and may increase the costs by as much as 2.5 times for nuclear power plants.
Even with this expense, watercourses immediately below cooling water discharges are often significantly warmer than normal. This results in the absence of ice during hard winters, and the growth of immense fish. Stories about the size of fish caught in artificially warmed streams and lakes abound, and these places become not only favorite fishing sites for people but winter roosting places for birds. Most states restrict thermal discharges so that the rise above ambient stream temperature levels will be equal to or less than 1◦C. Therefore, some of the heat in the cooling water must be dissipated into the atmosphere before the water is discharged. Various means are used for dissipating this energy, including large shallow ponds and cooling towers. A cutaway drawing of a typical cooling tower is shown in Figure 7.9. Cooling towers represent a substantial additional cost to the generation of electricity. They are estimated to double the cost of power production for fossil-fuel plants and may increase the costs by as much as 2.5 times for nuclear power plants. Even with this expense, watercourses immediately below cooling water discharges are often significantly warmer than normal. This results in the absence of ice during hard winters, and the growth of immense fish.

ASMAA ALWINDAWI

الاسبوع (26-30)
الوحدة النمطية

Introduction

Ideal Gas Law Calculations

The Ideal Gas Law

Under conditions such that the average distance between the molecules in a substance is great enough to neglect the effect of the intermolecular forces and the volume of the molecules themselves, a gas can be termed an **ideal gas**. More properly, an ideal gas is an imaginary gas that obeys exactly the following relationship

$$pV = nRT$$

Where p = absolute pressure of the gas
V = total volume occupied by the gas
n = number of moles of the gas
R = ideal gas constant in appropriate units
T = absolute temperature of the gas
Sometimes the ideal gas law is written as

$$p = RT \text{ V}$$

ASMAA ALWINDAWI

Table 13.1 Common Standard Conditions for the Ideal Gas			
System	T	P	$\hat{V}$
SI	273.15K	101.325 kPa	22.415 m^3/kg mol
Universal scientific	0.0°C	760 mm Hg	22.415 liters/g mol
Natural gas industry	60.0°F (15.0°C)	14.696 psia (101.325 kPa)	379.4 ft^3/lb mol
American engineering	32°F	1 atm	359.05 ft^3/lb mol

Example / Calculate the volume, in cubic meters, occupied by 40 kg of CO2 at standard conditions.

Solution

Basis: 40 kg of CO_2

$$\frac{40\ \text{kg } CO_2}{} \left| \frac{1\ \text{kg mol } CO_2}{44\ \text{kg } CO_2} \right| \frac{22.42\ m^3\ CO_2}{1\ \text{kg mol } CO_2} = 20.4\ m^3\ CO_2 \text{ atS.C.}$$

ASMA AL WI

Example/ Find the value for the universal gas constant ***R*** for the following combinations of units: For 1 g mol of ideal gas when the pressure is in atm, the volume in cm3, and the temperature in K.

Solution

At standard conditions we will use the approximate values

$$p = 1 \text{ atm}$$
$$\hat{V} = 22{,}415 \text{ cm}^3/\text{g mol}$$
$$T = 273.15 \text{K}$$

$$R = \frac{p\hat{V}}{T} = \frac{1 \text{ atm}}{273.15 \text{ K}} \left| \frac{22{,}415 \text{ cm}^3}{1 \text{ g mol}} \right. = 82.06 \frac{(\text{cm}^3)(\text{atm})}{(\text{K})(\text{g mol})}$$

In many processes going from an initial state to a final state, you can use the ratio of ideal gas law in the respective states and eliminate R as follows (the subscript 1 designates the initial state, and the subscript 2 designates the final state)

$$\frac{p_1 V_1}{p_2 V_2} = \frac{n_1 R T_1}{n_2 R T_2}$$

or

$$\left(\frac{p_1}{p_2}\right)\left(\frac{V_1}{V_2}\right) = \left(\frac{n_1}{n_2}\right)\left(\frac{T_1}{T_2}\right) \qquad \ldots 3.2$$

Example/ Calculate the volume occupied by 88 lb of **CO2** at a pressure of 32.2 ft of water and at 15°C

Solution

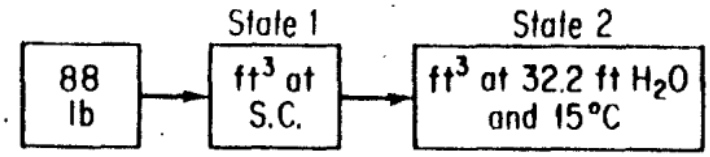

The final volume can be calculated via Equation 13.2 in which both **R** and **n1/n2** cancel out:

$$V_2 = V_1 \left(\frac{p_1}{p_2}\right)\left(\frac{T_2}{T_1}\right)$$

Assume that the pressure is absolute pressure.

ASMAA FAWZI AWI

At S.C. (state 1)	*At state 2*
$p = 33.91$ ft H_2O	$p = 32.2$ ft H_2O
$T = 273$ K	$T = 273 + 15 = 288$ K

Basis: 88 lb of CO_2

$$88 \text{ lb } CO_2 \left| \begin{array}{c|c|c|c} & 359 \text{ ft}^3 & 288 & 33.91 \\ 44 \text{ lb } CO_2 & 1 \text{ lb mol} & 273 & 32.2 \\ 1 \text{ lb mol } CO_2 & & & \end{array} \right. = 798 \text{ ft}^3 \text{ } CO_2 \text{ at } 32.2 \text{ ft } H_2O \text{ and } 15^\circ C$$

Calculation of V_1

The Gas Density

The **density of a gas** is defined as the mass per unit volume and can be expressed in kilograms per cubic meter, pounds per cubic foot, grams per liter, or other units

$$R = \frac{pV}{T}$$

At S.C.,

$p = 33.91$ ft H_2O $\quad V = 359$ ft^3/lb mol $\quad T = 273$K

$$R = \frac{33.91 \mid 359}{273} = 44.59 \frac{(\text{ft } H_2O)(\text{ft}^3)}{(\text{lb mol})(\text{K})}$$

$$V = \frac{nRT}{p} = \frac{\dfrac{88 \text{ lb } CO_2}{44 \text{ lb } CO_2 / \text{lb mol } CO_2} \mid \dfrac{44.59 \text{ (ft } H_2O\text{) (ft}^3\text{)}}{\text{(lb mol)(K)}} \mid \dfrac{288 \text{ K}}{32.2 \text{ ft } H_2O}}{}$$

$$= 798 \text{ ft}^3 \text{ } CO_2 \text{ at } 32.2 \text{ ft } H_2O \text{ and } 15^\circ C$$

Example / What is the density of N2 at 27°C and 100 kPa in SI units?

Solution

Basis: 1 m^3 of N_2 at 27°C and 100 kPa

$$\frac{1 \text{ m}^3 \mid 273 \text{ K} \mid 100 \text{ kPa} \mid 1 \text{ kg mol} \mid 28 \text{ kg}}{\quad \mid 300 \text{ K} \mid 101.3 \text{ kPa} \mid 22.4 \text{ m}^3 \mid 1 \text{ kg mol}} = 1.123 \text{ kg}$$

density = 1.123 kg/m^3 of N_2 at 27°C (300 K) and 100 kPa

Ideal Gas Mixtures and Partial Pressure

The **partial pressure** of gas; i defined by **Dalton**, *pi*, namely the pressure that would be exerted by a single component in a gaseous mixture if it existed by itself in the same volume as occupied by the mixture and at the same temperature of the mixture is

$$p_i V_{total} = n_i R T_{total} \qquad \ldots 3.4$$

Where p_i is the partial pressure of component i. If you divide Eq. (13.4) by Eq. (13.1), you find that

$$\frac{p_i V_{total}}{p_{total} V_{total}} = \frac{n_i RT_{total}}{n_{total} RT_{total}}$$

or

$$p_i = p_{total} \frac{n_i}{n_{total}} = p_{total} y_i \qquad \ldots 13.5$$

Example / A flue gas analyzes 14.0% CO2, 6.0% O2, and 80.0% N2. It is at 400°F and 765.0 mm Hg pressure. Calculate the partial pressure of each component.

Solution

Use Eq, (13.5) *pi = pt yi*

Basis: 1.00 kg (or lb) mol flue gas

Basis: 1.00 kg (or lb) mol flue gas

Component	*kg (or lb) mol*	*p (mm Hg)*
CO_2	0.140	107.1
O_2	0.060	45.9
N_2	0.800	612.0
Total	1.000	765.0